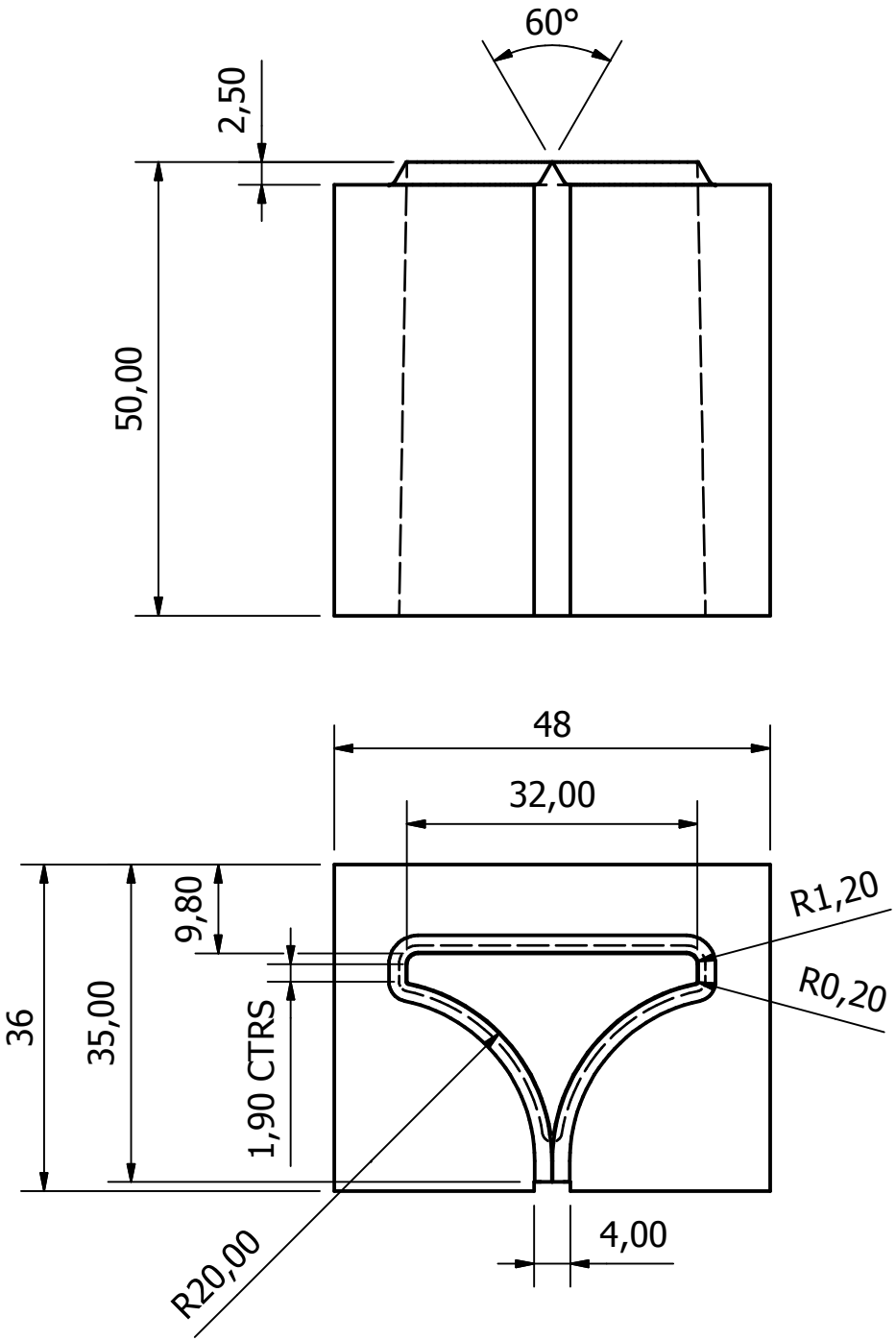

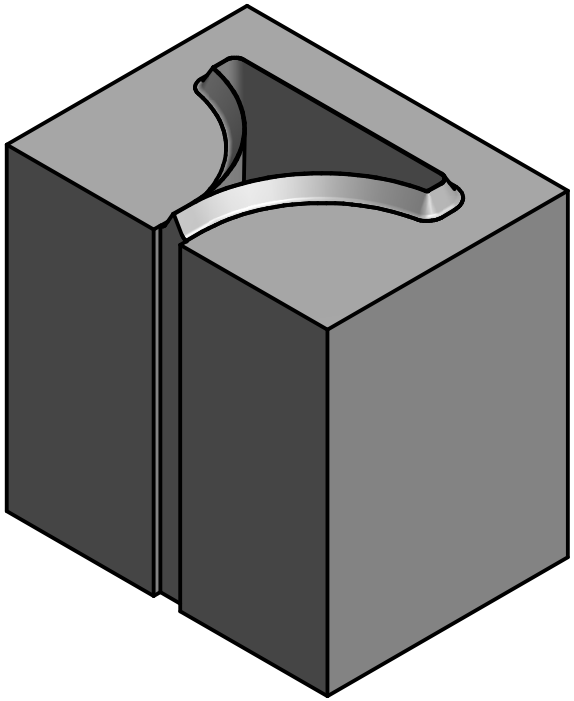

HS4836-50

HALF STAR R20,00
36x48mm, 50,00mm HIGH
TO SUIT 4mm CUTTING RULE

Stellar Technik