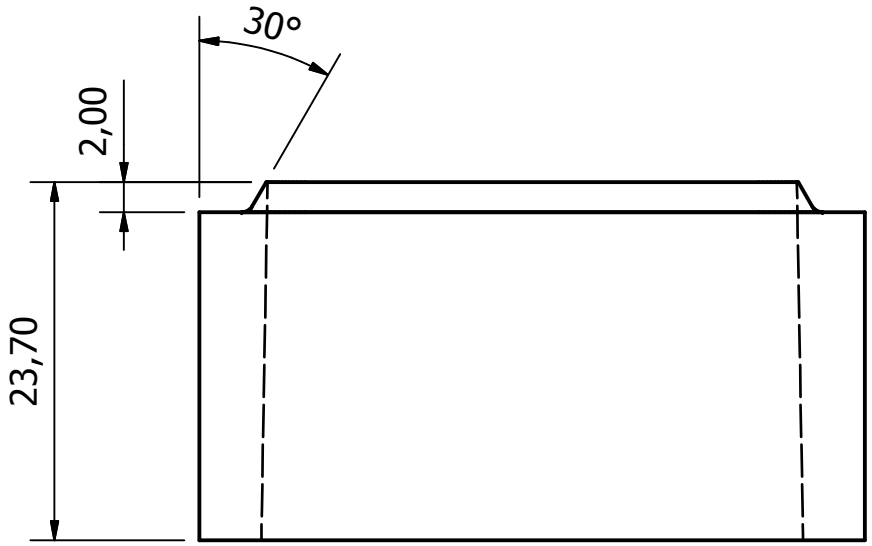

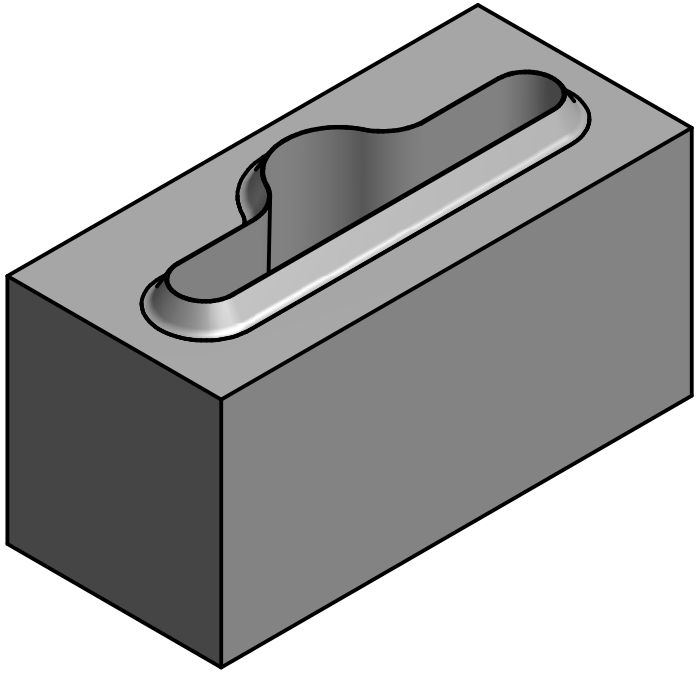

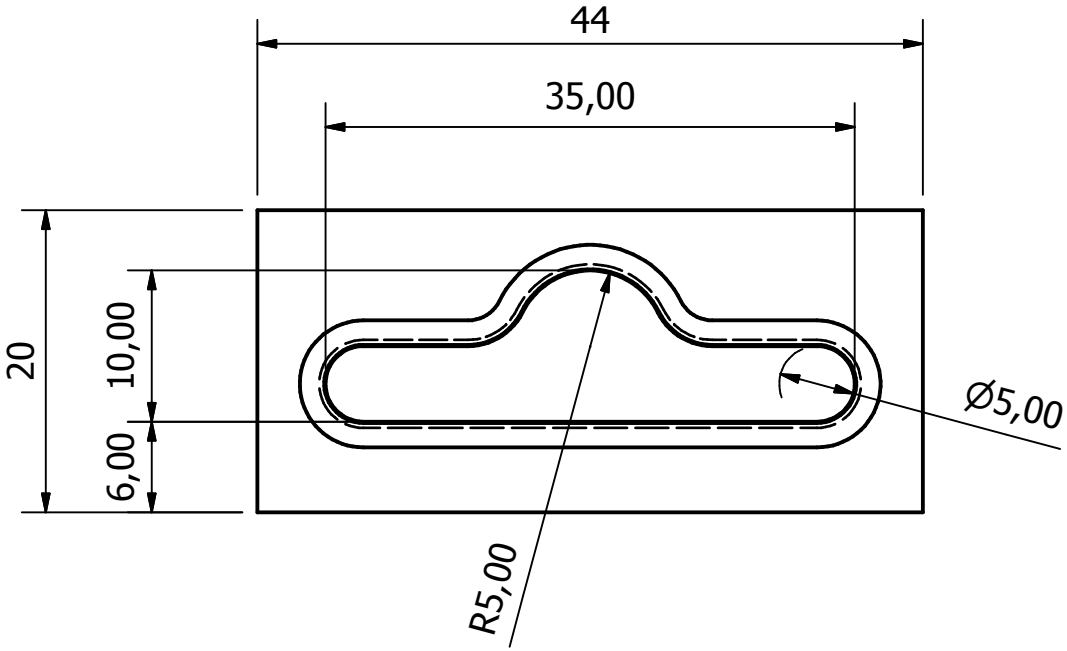

EP2044-1

EUROPUNCH Ø5,00 x 35,00
20x44mm, 23,70mm HIGH

Stellar Technik